Ethylene Detector-Transmitter E2638-C2H4

IP65 | 4-20 mA 0-10 V | RS485 Modbus

Features

- Accurate and stable measurement
- Easy to install robust enclosure
- Two analog outputs settable to 4-20 mA or 0-10 V
- RS485 Modbus RTU digital interface
- Relay option
- Attached or remote sensor
- LCD indicator option

Specifications

Calibration	Ethylene C_2H_4		
Sensor type	Electrochemical		
Sampling method	Diffusion		
Typical detection ranges	0...10 ppm	0...200 ppm	0...1500 ppm
Maximum overload	20 ppm	500 ppm	2000 ppm
Resolution	0.1 ppm	1 ppm	1 ppm
Response time T90	< 60 s	< 60 s	< 60 s
Signal update	Every 1 second		
Maintenance interval	6 months		
Sensor lifetime	> 2 years		
Self-diagnostics	Full functionality check at start-up		
Warm-up time	≤ 1 min		
Power supply	12...36 VDC (default) 24 VAC or 230 VAC as options		
Power consumption	< 2 VA		
Digital interface	RS485, Modbus RTU protocol		
Analog outputs	2 × 4-20 mA / 0-10 V, user settable		
Output scale width	Recommended: 20-100% of the range; > 10 × resolution in any case		
Enclosure	Grey ABS plastic, wall mount, protection class IP65		
Dimensions	H90 × W145 × D55 mm (housing only) H140 with cable glands		
Operating environment	Industrial indoor and outdoor locations		
Operating conditions	-40...+50°C, up to100 %RH; 0,9...1,1 atm; Explosion-safe areas; Non-aggressive atmosphere		

Dimensions

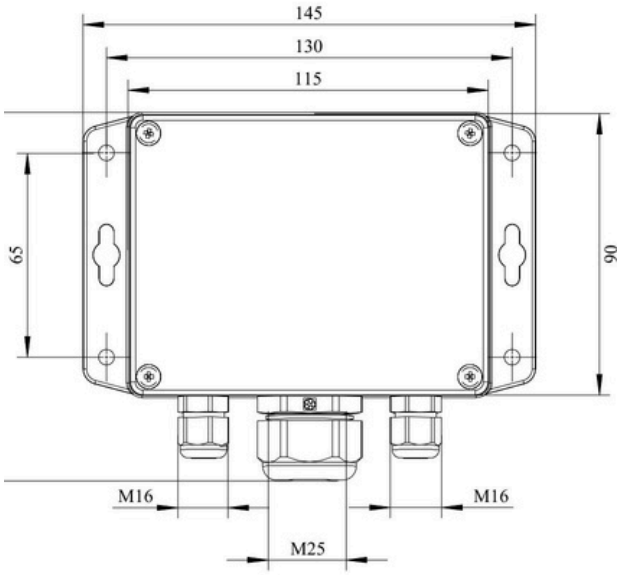

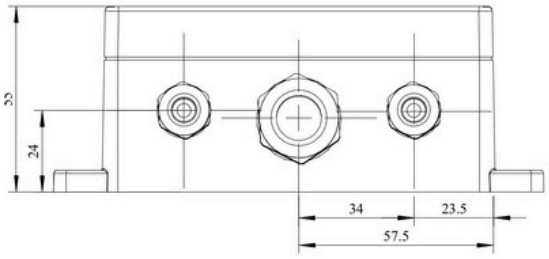

Additional options

Remote sensor probe	Protection IP65, shielded cable default cable length 3.0 m
Self-test button	Triggers both relays simultaneously; push-button switch
Relay outputs	
Output relays	2 × SPST relays (closing contact), 250 VAC / 30 VDC, 5 A max
Default alarm set-points	Determined by user within 5-95% of the range
Alarm signalling	
Visual	Red and green LEDs
Acoustic	Buzzer 85 dB

LCD indicator	
Operating temperature	0...+50 °C
Display dimensions	72 × 36 mm
Number of digits	3.5 7-segment
Character height	14 mm
Other features	Backlight
Protection class	IP50 (both for built-in and remote LCD options)

NOTE! Only one analog output is available for a version with LCD
NOTE!LCD and LEDs can not be chosen simultaneously

Remote probe

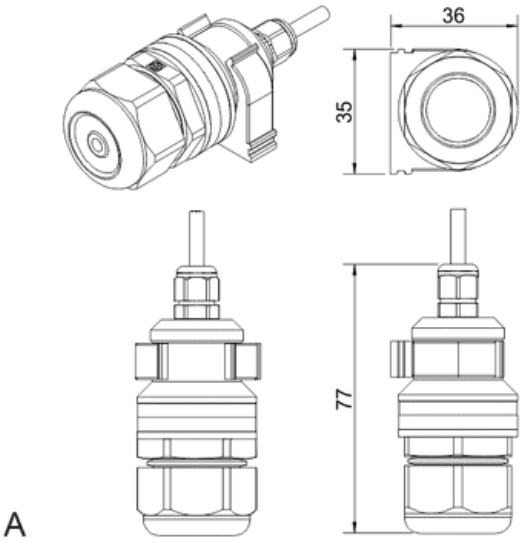

Wall mount remote probe with fixing clamp (default version)

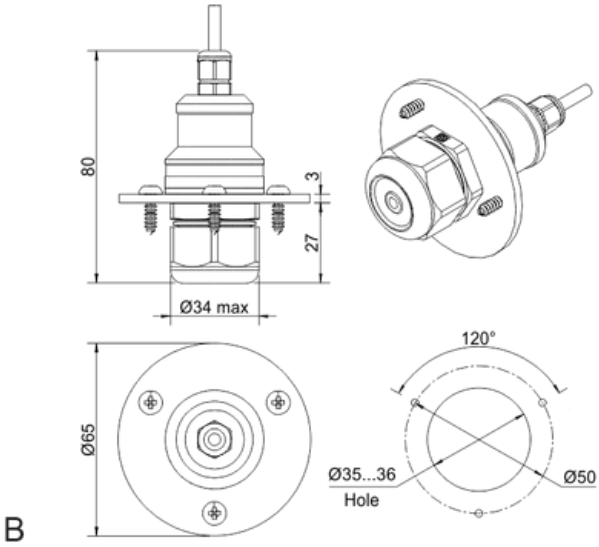

Remote probe with rubber flange and three self-tapping screws (on request)

Remote Probe

Duct Mount

LED Alarms

Integrated LCD Displays

Remote LCD Displays

LED Warning Sign with Alarm